NOTE:
1. ALL DIMENSIONS ARE IN INCHES.
2. HARDWARE TO BE ZINC PLATED.
3. SEE LOCTITE NOTES.

FHS LEVELING BOLT ASSEMBLY, ZINC PLATED												
	DIMENSION						HEADED LEVELING BOLT	THREADED STUD	JAM NUT	DOWEL PIN	COUPLING NUT	FLAT WASHER
ITEM	A	B	C	D	E	F	51.013-	51.030-	51.046-	51.146-	51.048-	51.060-
01	0.50	4.00	0.63	1.75	5.23	-	01	-	-	-	01	03
02	0.63	4.50	0.75	2.13	6.01	-	02	-	-	-	02	04
04	0.50	6.19	0.63	1.75	7.42	-	03	-	-	-	01	03

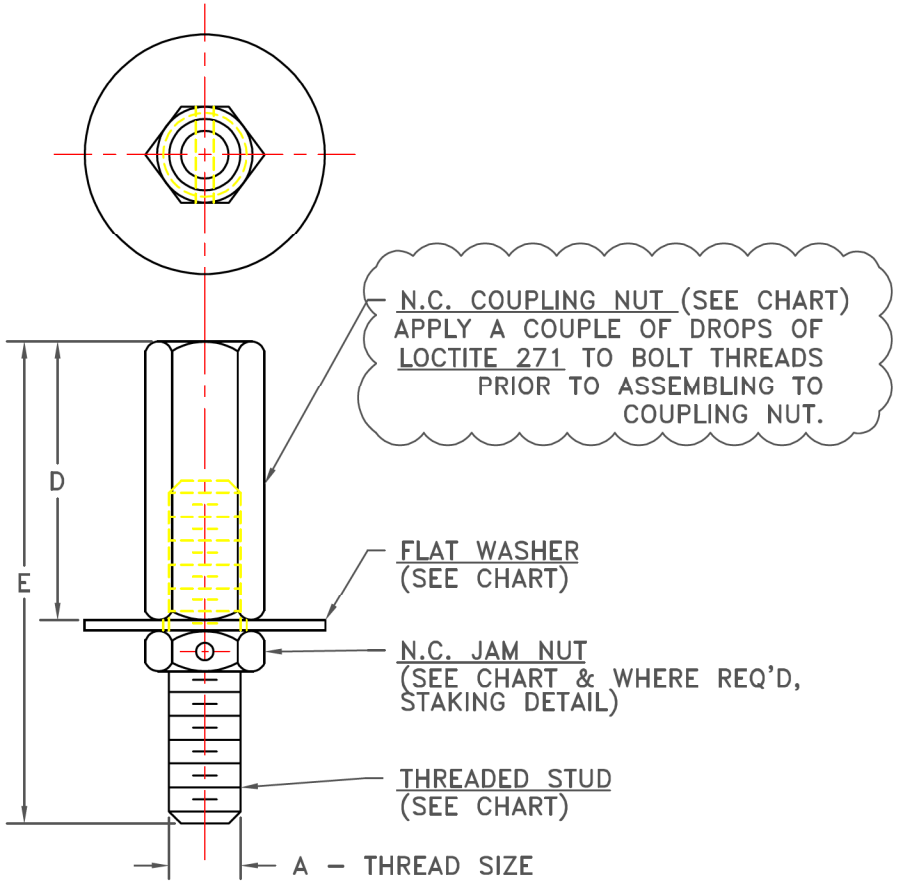

HEADED LEVELING BOLT

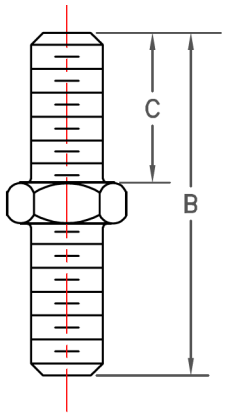

STAKED LEVELING BOLT

ITEM #06
DRILL INTO ASSEMBLY
F – DIA. x 0.38 DEEP
APPLY LOCTITE 271 AND STAKE
HEX NUT TO STUD WITH
DOWEL PIN (SEE CHART)
FLUSH WITH HEX FLAT

ITEMS #05 & #07
DRILL THRU ASSEMBLY F – DIA.
APPLY LOCTITE 271 AND STAKE
HEX NUT TO STUD WITH
DOWEL PIN (SEE CHART)
FLUSH WITH HEX FLATS

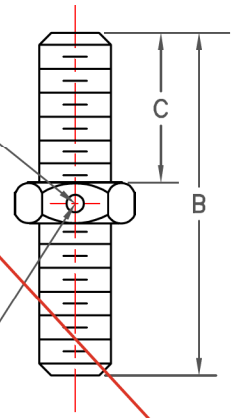

STAKING DETAIL

NO.	REVISION	DIMENSION TOLERANCE		TITLE
		± 0.06		FHS LEVELING BOLT ASSEMBLY
		DIRECTORY:	DATE	DRAWN BY	DRAWING NO.
		P–52	02/19/97	TLT	52.044–00